SHEET SEVEN

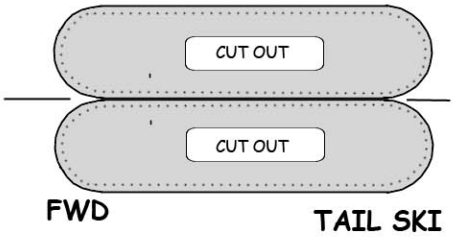

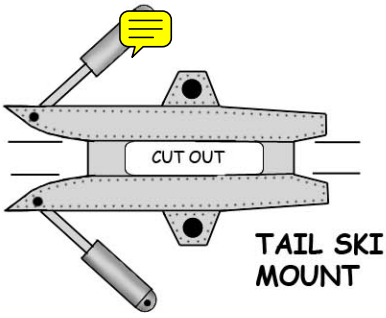

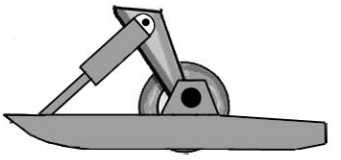

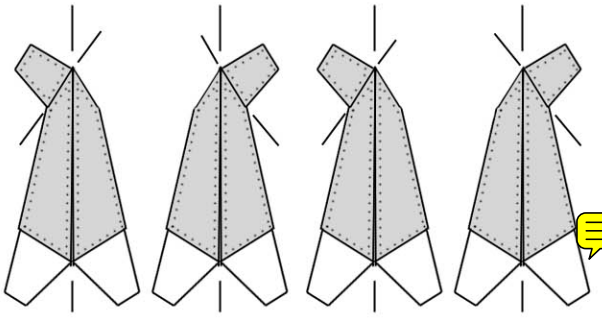
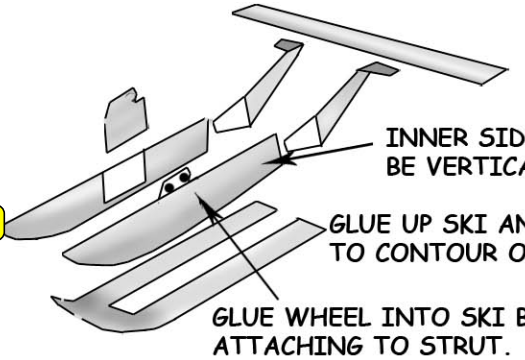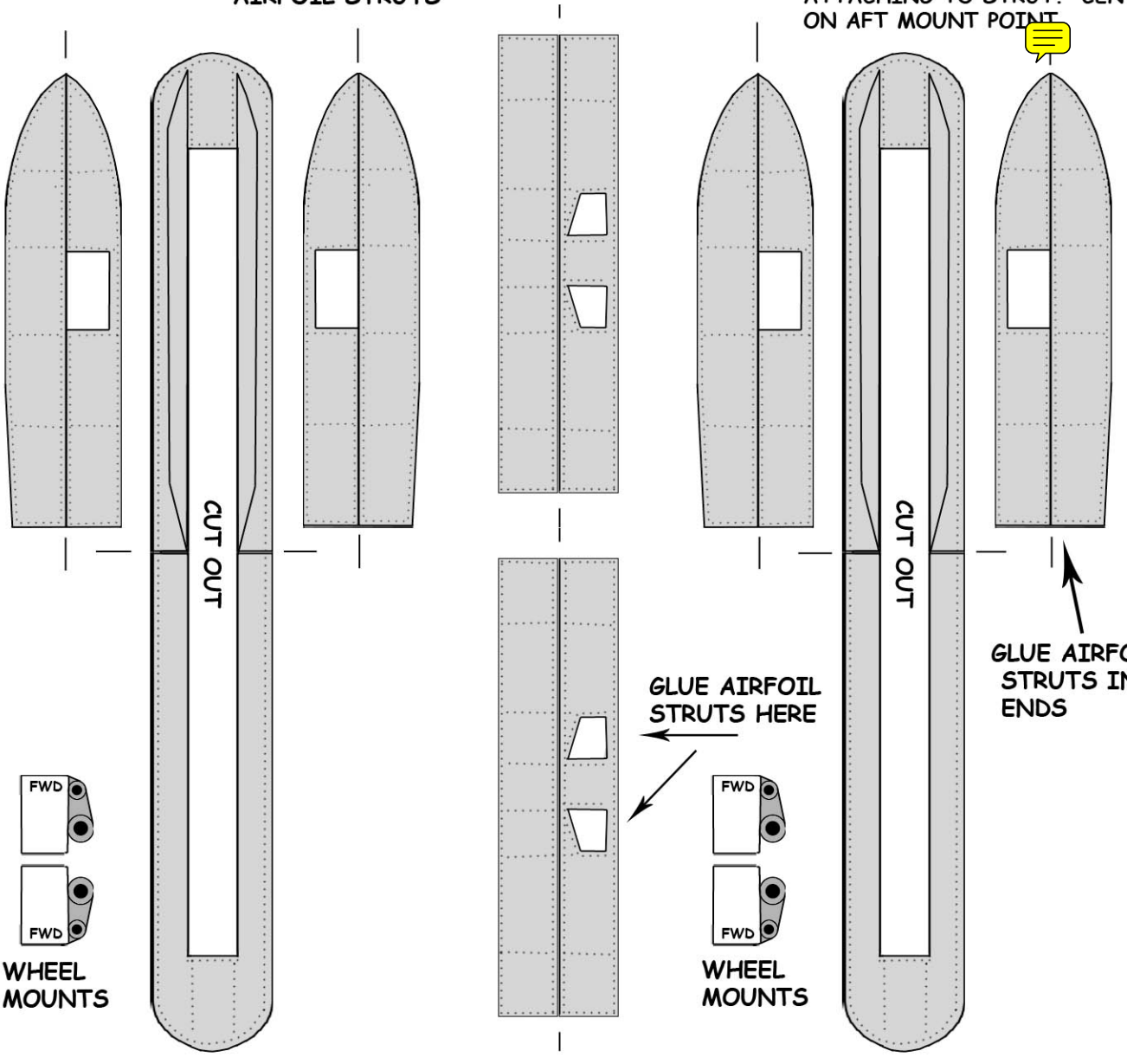
AIRFOIL STRUTS